1. A 505
2.
3.
4.
5. 16.88%
6. 1405 : 3.7
7.
8. 3G
9.

1.
2.
3. 2009
4. 09 1-2
5. 1
6. 08 09
7.
8.

1. LNG

上海漢鐘精機股份有限公司
LTD. SHANGHAI HANBELL PRECISE MACHINERY CO., L

2. 10

3.

4.

5.

6. 15

7.

8.

9.

10.

11.

12. 2009

1. “ ” “ ”

2.

3.

4.

5.

6. :

7. [ ]

8.

9.

10.

1 A 505

2 17 3 3

3 4 A

48

273 8.6%

126.68 6.12%

505

505

A 2 17 2402

3 3 2037

2000 3 4

2 17 3 3

505

A 2 2

1990 2 13 2320 16.58%

853.17

3 4 3 4

237.2

上海漢鐘精機股份有限公司
LTD. SHANGHAI HANBELL PRECISE MACHINERY CO., L

2400

233

2 16

2 16

	6,800	-116,846	
	5,526	-22,411	
	4,322	-22,976	
CDM	4,195	-61,440	
	3,036	-55,448	ST
	348	-26,799	

------ To

2

“

” “ ”

“ ”

.08Tc (”)Tj /TT3 1 Tf 0.465 0 TD 0.0208 T<05a4124501c9186

上海漢鐘精機股份有限公司
TD. SHANGHAI HANBELL PRECISE MACHINERY CO., L

2007

2008

“ ”

“ 2008 10

11 ”

“

”

SOHO 2008

“ 12

”

“2008 7000 ” “

2007 11 2008 11 1 H

75% 3 90%

1/10 1000 1300 ”

“

”

“ 50% ”

“

”

“

”

“ ”

6 4

“90/70”

“90/70”

“ 4 1

” “

”

“

”

“

”

“

”

“

”

REITs(

) “

”

“

” ----2009-3-1

7:31:00 To

http://news2.eastmoney.com/090301,1107,1030265.html

3

”

”

4f -

上海漢鐘精機股份有限公司
TD. SHANGHAI HANBELL PRECISE MACHINERY CO., L

”

“

2650 ”

“

2600 ”

11 “

” “ ”

To

http://finance.sina.com.cn/stock/zldx/20090414/01476097337.shtml

5 16.88%

300 %

⊙

2008 2008

2007 16.88%

4 30 *ST B 1624 2008

113237.03 16.63%

GDP 37.66%

8209.14 16.88%

2008 2753.83 2777.95

2270.80 366.49

1624 2008 0.3381 21.71%

11.52 3.39 2.9344

1.30%

1624 1370 254 15.64 % 2007

14 100 “ ”

883 843

2805.45 34.17%

4 29 1405 1851.56

21.53% 373.60 % To

http://www.cnstock.com/paper_new/html/2009-04/30/content_69318863.htm

6 1405 : 3.7

2009 4 29 1405 2009

1851.56 21.53% 2008

373.60 % 220

2008 1405

19839.34 22826.75 13.09%

1403 19710.55

22663.05 13.03%

1405 1851.56

21.53% 1845.46 389.67

373.60% 0.0867 2008 0.0183

7 1405 1048

74.59% 357 25.41% 515 586

1 3

2451.43 82.01%

269 614.15

7.90% 21.80% 41.36 23.92%

17.40%

300

237 300 15657.96 1405

78.92 % 1705.33 92.10%

ST “ ” 119 ST

45 74

8

352.89

6.03% 0.11 10%

18.32 0.32

132.02% 1.87

8

23.17 20.59% 119.32%

“ ”

2008 48.29

2.2 91.49

9.81 ST *ST To

http://news.cnfol.com/090427/101,1279,5799421,00.shtml

7

4 26 ( )

26

“

”

30

2 2008

406.5 63.6%

“

” “ ” “ ” “ (

)”

30% 60

LED

To

9

20 20

20 GDP

GDP

GDP

GDP GDP

GDP

2009

17%

25%

70

“ ”

To

上海漢鐘精機股份有限公司
TD. SHANGHAI HANBELL PRECISE MACHINERY CO., L

1-60m /min 20bar

1

1

4.5MPa

5 10

To

------ 2009 3

2

2008 147

41 67 192

20

20

—

2000 2005 40%

1

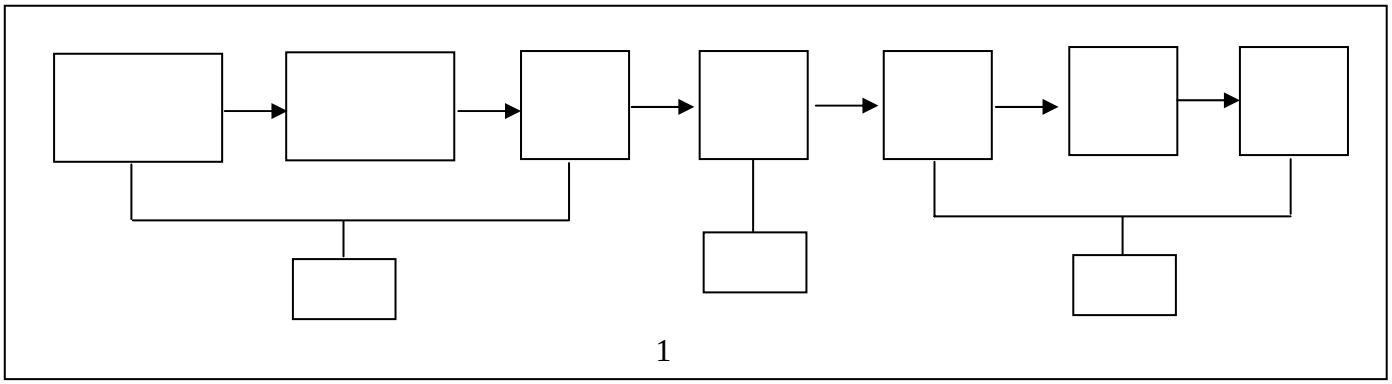

1

上海漢鐘精機股份有限公司
TD. SHANGHAI HANBELL PRECISE MACHINERY CO., L

5

JRDL-900 30L/min 40

1

2 142

To

------ 2009 3

3 2009

2008

2008

09

2009

2009

5

09

30

2008

2008

4

------ 2009 3 To

4 09 1-2

http://www.chinahvacr.com/News/Class8/200904/News_20090410092927_3023894.shtml

6 08 09

2008

2008 1 1

2008

2008 1 1

2008 70

200 08

2008 30

2008 2008

500

15~100 1

150~500 500

2000

2008 10 2008 10

30 2008 11

2008 Tf5 0 Tc0.7 757.4e58231f5008

------ 2009 4 To

8

上海漢鐘精機股份有限公司
LTD. SHANGHAI HANBELL PRECISE MACHINERY CO., L

------ 2009 4 To

1 LNG

LNG

KANFAAragonA.S

Sevan

M-flex

08

Mafi-Trench

LNG

RonnieLeten 2007 Mafi-Trench

LNG-FPSO( )

LNG

170

------ 2009 3 To

2 10

2009 3 30 —— (NYSE:IR)

2009

2012 3

A

4500

364

2 2009 4 1

2009 6

0.18

0.07 2009 9 “ ”

HerbertL.Henkel “

”

“ 2010 ”Henkel

“ ” To

http://info.hvacr.hc360.com/2009/04/090942114768.shtml

3

2008 25.91 7.94 2.13
16.35 1.50 7.30
0.46

09 08 54.6 08
16.0%
70% 08
51.9% 09
09

08
35.38%
80.2% 08 1.31 8.81%
08 1290.3
07 3.5

09
2010
44% 34%

08
09

2010

2009-2010 0.47 0.51

21 19 “ ”

To

http://finance.sina.com.cn/stock/companyresearch/20090318/15382738445.shtml

4

3 5

150 “ ”

2008 2009

2008 12

MDS-W

WGZ-B MCW-D MHSH

MAC-XE

To

http://info.hvacr.hc360.com/2009/03/121427112855.shtml

5

To

http://info.hvacr.hc360.com/2009/03/101712112691.shtml

6 15

2009

2

100% G-Matrik G-Matrik

12 15

50%-80%

15

180 30

30

50

100 30 100 15 120

10 130

“ ”

30

G-Matrik 15 120

G-Matrik 180

15

30

30 50%~80%

G-Matrik

100%

30HZ 30HZ

12

G-Matrik 15

“ ”

“

”

10

To

http://info.hvacr.hc360.com/2009/03/241638113714.shtml

7

3 27 2009

" target=_blank>

15%

" target=_blank> 280KW 1800KW

To

http://info.hvacr.hc360.com/2009/03/260842113861.shtml

8

300

UTTAR

07

“ ”

“ ”

“ ”

40

180° “

(SVE) ” 59%

“ ”

To

http://info.hvacr.hc360.com/2009/04/131427115063.shtml

9

2009 4 5

“

” ——

6

To

http://info.hvacr.hc360.com/2009/04/130948115023.shtml

10

" " 100

2009

2008

2008

2009

2009

2009

2009

“ ” “ ” To

http://info.hvacr.hc360.com/2009/03/271408113984.shtml

11

3 14

1000

3

15% 20%

2009

To

------ 251

12 2009

2008

20%

50%

---- 2004

38

58

---- 2003

78 250

3

To

------ 251

1 “ ” “ ”

20

,

400

----2009/3/16/08:15 To

http://info.hvacr.hc360.com/2009/03/160815112921.shtml

2

---2009/3/23/08:25

To

http://info.hvacr.hc360.com/2009/03/230825113503.shtml

3

To

http://info.hvacr.hc360.com/2009/03/270830113912.shtml

4

To

http://gegu.stock.cnfol.com/090331/125,1332,5668654,00.shtml

5

To

http://paper.cnstock.com/html/2009-03/31/content_67972602.htm#

6 :

To

http://gegu.stock.cnfol.com/090401/125,1333,5675643,00.shtml

7 [ ]

To

http://allcom7.p5w.net/EasyIRM/DesktopModules/IRWebNews/WebNewsRecentDisp.aspx?WebNewsID=1852373&favorite=

8

上海漢鐘精機股份有限公司
TD. SHANGHAI HANBELL PRECISE MACHINERY CO., L

To

http://allcom7.p5w.net/EasyIRM/DesktopModules/IRWebNews/WebNewsRecentDisp.aspx?WebNewsID=1874140&favorite=

9

To

http://www.ttb2b.com/ShowGridDetails.aspx?id=11652

10

To

http://stock.hexun.com/2009-04-28/117172830.html